CMR

Code: H200/45

Ratio	Nm Rating	Shaft size	Pump Shaft	Oil type	Kg
16,4:1	2000	45mm	25mm	SAE90EP	28

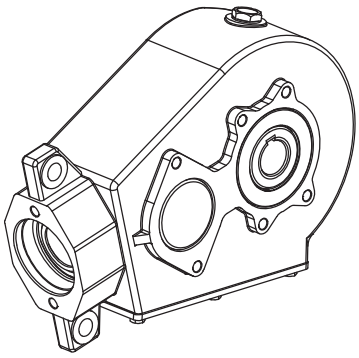

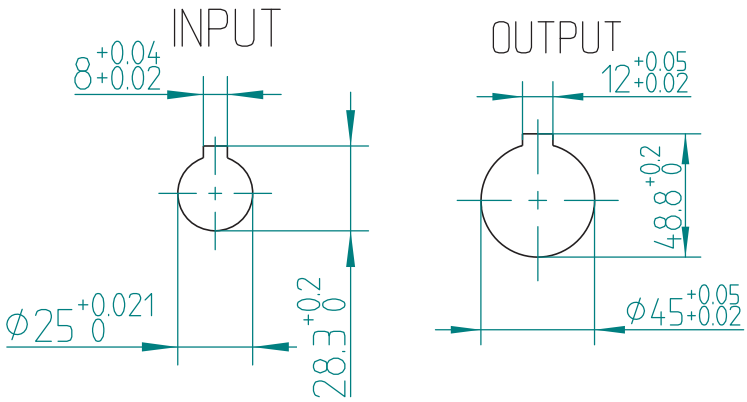

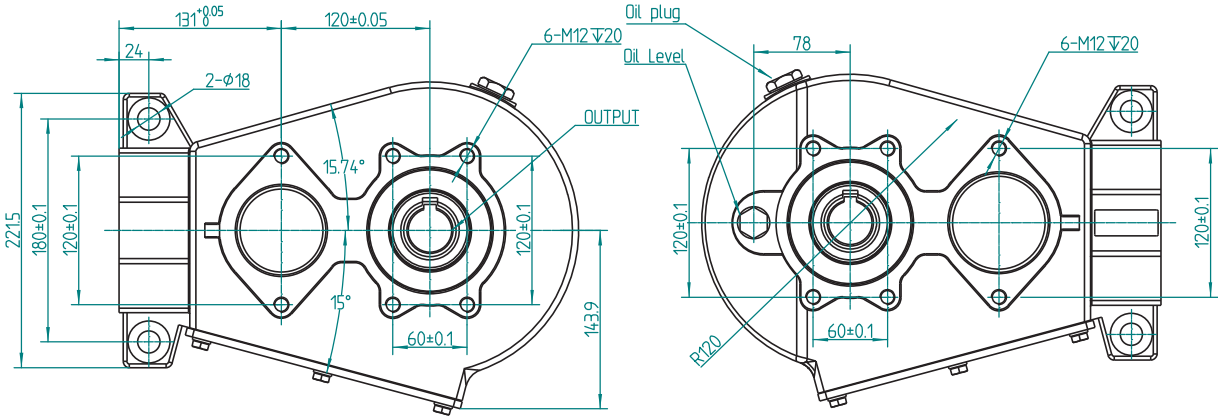

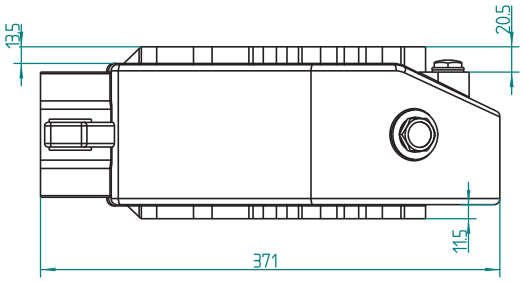

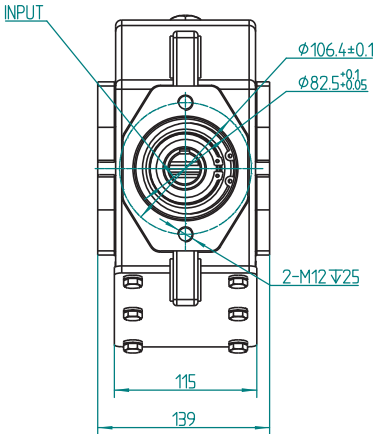

Note: Equivalent to Berma RT200